SpeedyCare™ UV
The SEWERTRONICS brand for disinfection

# SpeedyCare™ Satellite

## Multiple Placement & Configurations

SpeedyCare™ Master and Satellite configuration brings flexibility to your disinfection processes. The Master SpeedyCare™ 440M can connect up to 6 SpeedyCare™ 220S satellite devices, adapting to a specific room and space geometry. The Master SpeedyCare™ 440M acts as the brain of the network, mastering the cleaning process, including safety features and exposure times.

The Satellite concept is specially designed for disinfection of spaces with multiple small-sized rooms and complex geometries like fitting rooms or public bathrooms.

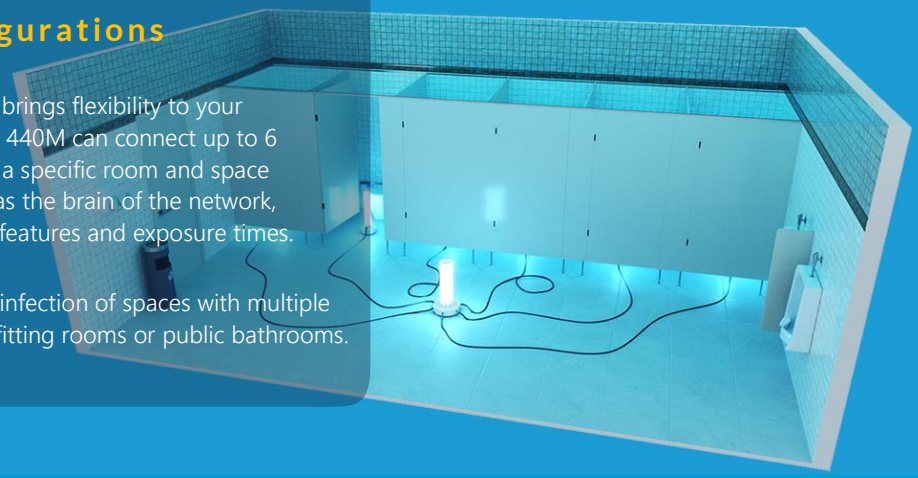

### AIR & SURFACE
UV-C DISINFECTION

UV-C light is a non-invasive disinfection method, delivering instantly a lethal dose of radiation to pathogens both in surface and air, deactivating their capabilities to reproduce.

### MASTER-SATELLITE CONCEPT
CONNECT UP TO 6 SPEEDYCARES 220

Flexible configuration from 1+1 to 1+6 disinfection devices. Smart set-up for every space. Star, series or combined geometry to adapt to any application. Up to 1,760 W of UV power.

### CERTIFICATION
SAFETY ACCORDING ISO15858:2016

SpeedyCare™ Satellite lighting properties have been certified by an accredited laboratory that guarantees its UV-C radiation performance and hence the disinfection capabilities. The device is also designed following the standards according ISO 15858:2016.

### DISINFECT IN MINUTES
FROM A SEVERAL POSITIONS

The Master-Satellite concept allows smart distribution of the lightning devices along the space to disinfect. Increased efficiency for fast disinfection.

### UP TO 1760 W
SPEEDYCARE™ 440M & 220S

Satellite concept allows the interconnection of one SpeedyCare™ UV 440 and up to 6 SpeedyCares UV 220, making a total power of 1,760 W. Max power for fast disinfection.

### MOTION SENSORS
AUTO-STOP FUNCTION

Four built in motion sensors are located at the top of the robot, for a 360º auto-stop safety function, avoiding unprogrammed light exposures.

## SpeedyCare™ Satellite
ADAPTIVE UV-C DISINFECTION

SpeedyCare™ Master and Satellite configuration brings flexibility to your disinfection processes. The Master SpeedyCare™ 440M can connect up to 6 SpeedyCare™ 220S satellite devices, adapting to a specific room and space geometry. The Master SpeedyCare™ 440M acts as the brain of the network, mastering the cleaning process, including safety features and exposure times.

The Satellite concept is specially designed for disinfection of spaces with multiple small-sized rooms and complex geometries like fitting rooms or public bathrooms.

SEWERTRONICS, S.L. - Avenida Monteclaro s/n 28223 Pozuelo de Alarcón - Madrid - Spain | Phone +34 917 676 505 uvc-disinfection@sewertronics.com

SPEEDYCARE™ 440M & 220S

# Master – Satelline Concept

SpeedyCare™ Master and Satellite configuration brings flexibility to your disinfection processes by adapting to every room geometry and complexity. Connect up to 6 SpeedyCare™ 220S to one SpeedyCare™ 440M in different configurations, from 1+1 to 1+6.

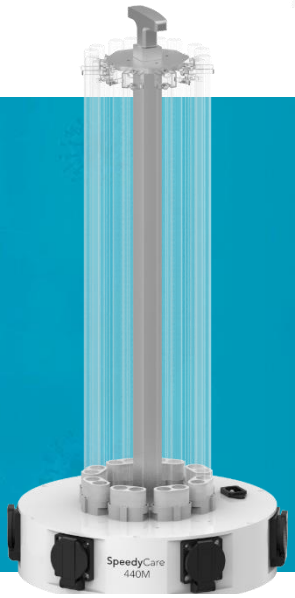


SPEEDYCARE™ 440M

## THE BRAIN OF THE NETWORK

SpeedyCare™ 440M controls up to 6 SpeedyCare™ 220S satellite devices, mastering disinfection operation, controlling lighting exposure of all the devices connected. With power of 440 W of UV-C, this unit will disinfect the largest space within minutes. It features motion sensor for safety purposes.

SPEEDYCARE™ 220S

# SATELLITE DISINFECTION DEVICE

SpeedyCare™ 220S features 220 W of the UV-C light power. It is designed to work in combination with SpeedyCare™ 440M, that controls its disinfection cycle. A dedicated cable provides both – network connectivity and power to all the expansion devices.

SpeedyCare™ 220S is designed to work in small spaces like fitting rooms, typically any area less than 10 m2.


SPEEDYCARE™ UV DISINFECTING PERFORMANCE

## Disinfecting Speeds

SpeedyCare™ UV robot disinfection capabilities are proportional to the exposure time. The UV-C lamps work at maximum output; it is lighting time what defines the degree of pathogens deactivation. But disinfection rate is not an absolute variable. Microbiologists use the log reduction factor to express the level of microorganisms' disinfection, and this reduction factor conditions the exposure time for a given disinfecting UV-C device.

**SpeedyCare™ 440**

| Room Dimensions | 90% Disinfection | 99% Disinfection |
|---|---|---|
| 10 $m^2$ | 1.25 min | 2.5 min |
| 20 $m^2$ | 2.5 min | 5 min |

**SpeedyCare™ 220**

| Room Dimensions | 90% Disinfection | 99% Disinfection |
|---|---|---|
| 10 $m^2$ | 2.5 min | 5 min |

DIFFERENT INTERCONNECTING CONFIGURATIONS

# STAR, SERIES, COMBINED

SpeedyCare™ 440M features 6 ports to connect up to 6 SpeedyCare™ 220S. Each SpeedyCare™ 220S is designed to be linked to another device of its kind, so a multiple variety of interconnecting configurations are possible.

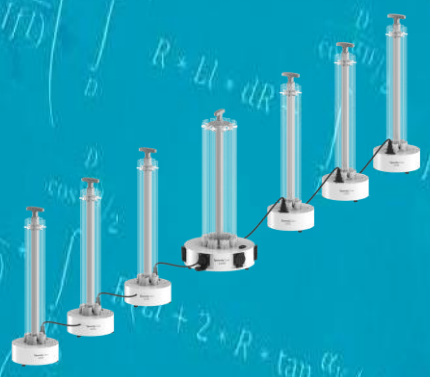

INTERCONNECTION IN SERIES

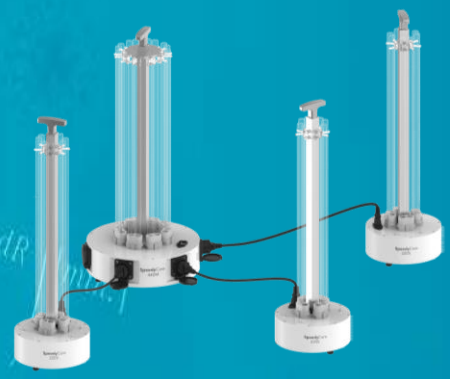

STAR INTERCONNECTION

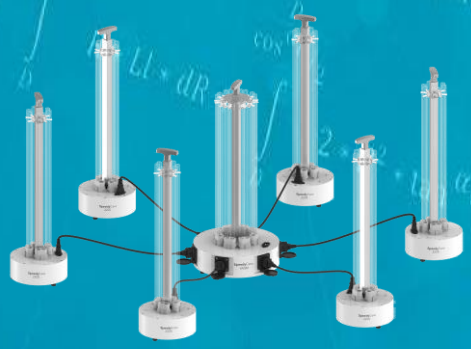

STAR INTERCONNECTION

COMBINED STAR AND IN SERIES INTERCONNECTION

A 99% PATHOGENS INACTIVATION

## Fast Disinfection

SpeedyCare™ 440M and 220S features a set of UV-C lamps delivering the right dose of radiation to effectively deactivate pathogens in both air and surface. User selects the LOG factor, meaning the % percentage of disinfection. Typical used values are 90%, 99% and 99.9%.

For a 99% pathogens inactivation a room of 5 m2 can be disinfected in 2 min.

The larger is the room and the higher is the LOG factor, the longer will be the disinfection time.

**SpeedyCare™ 440**

| Room Dimensions | 90% Disinfection | 99% Disinfection |
|---|---|---|
| 10 $m^2$ | 1.25 min | 2.5 min |
| 20 $m^2$ | 2.5 min | 5 min |

**SpeedyCare™ 220**

| Room Dimensions | 90% Disinfection | 99% Disinfection |
|---|---|---|
| 10 $m^2$ | 2.5 min | 5 min |

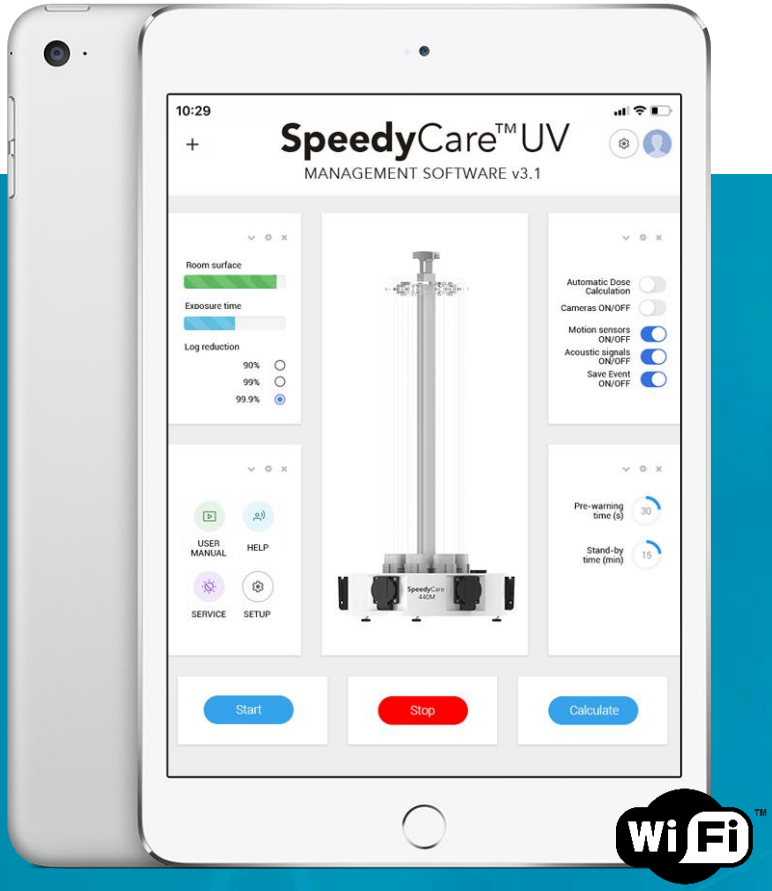


EFFICIENT UV-C DISINFECTING ROBOT

## Controlled by phone or tablet

SpeedyCare™ 440M generates it's own WiFi network so can wirelessly be controlled by a conventional tablet or smartphone. Our own app - SpeedyCare™ UV Management Software provides access to all the necessary functions such as - delay time definition in accordance to user's preferences, user manual and more.

The SpeedyCare™ 440M disinfection robot, after connecting to any WAN, offers an integrated maintenance and remote diagnostic capability.

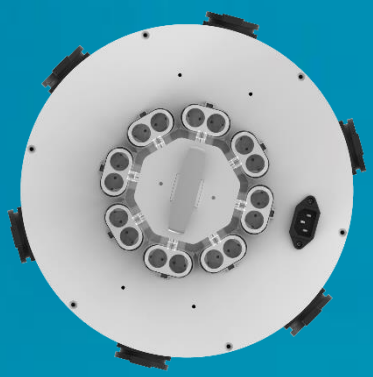

EFFICIENT UV-C DISINFECTING ROBOT

## Hi-Output UV-C lamps

A set of 8 double tube hi-power lamps (SpeedyCare™ 440M) and 4 double (SpeedyCare™ 220S) in cylindrical disposition emit UV-C light to ensure efficient and fast virus deactivation. More powerful UV-C devices improve and reduce the exposure times to disinfect, representing a more efficient and cost-effective equipment.

PHILIPS

# SpeedyCare™ 440

## THE BRAIN IN THE DISINFECTION NETWORK

SpeedyCare™ 440 is the brain behind the satellite concept. It controls up to 6 satellite devices, mastering disinfection operation, controlling lighting exposure of all the devices connected. With power of 440 W of UV-C, this unit will effectively disinfect spaces within minutes. It features motion sensor for safety purposes.

Connect the unit to the wall socket and program it with a smartphone or tablet. Press start and SpeedyCare™ 440 will take care of the rest.

### Bring it Anywhere

SpeedyCare™ 440 is a lightweight UV-C disinfection device, with capabilities to interconnect up to another 6 SpeedyCare™ 220S.

### LED Lights & Acoustics

A multicolor LED omnidirectional light provides color-codes for extra safety and information about the operation of the SpeedyCare™ 440 robot. Acoustic signal brings extra information to the robot user.

### Controls up to 6 SpeedyCare™ 220S

SpeedyCare™ 440M, the Master of the disinfection network, can connect with up to 6 SpeedyCare™ 220 Satellite UV-C devices.

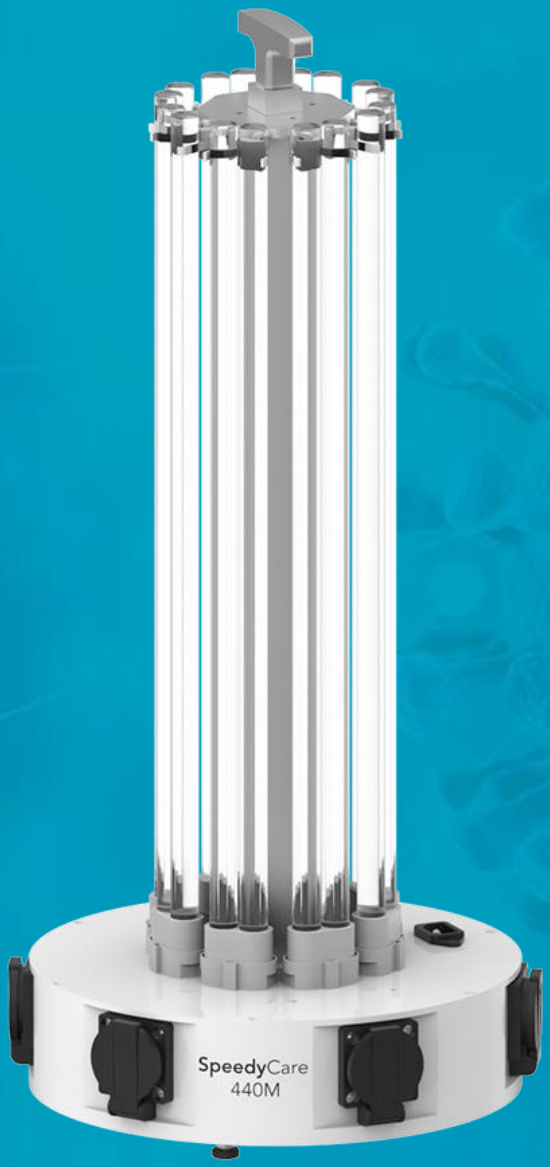


### 254 nm

A germicidal wavelength that inactivates pathogens in both air & surfaces. Disinfects 99.9% in minutes.

### Motion sensors. Auto-Stop

Two embedded motion sensors for a 360º auto-stop safety function, avoiding unprogrammed light exposures to operators.

### Hi-power UV-C lamps

A set of 8 hi-power lamps in cylindrical disposition emit UV-C light to ensure efficient and fast virus deactivation.

SpeedyCare™ UV
The SEWERTRONICS brand for disinfection

# SpeedyCare™ 220S

THE SATELLITE IN THE DISINFECTION NETWORK

SpeedyCare™ 220S connects to its master SpeedyCare™ 440M, from which receives the commands to control lighting exposure and safety features. With power of 220 W of UV-C, this unit will effectively disinfect small spaces within minutes. SpeedyCare™ 220S is designed to work linked to SpeedyCare™ 440M.


## Bring it Anywhere

SpeedyCare™ 220S is a lightweight UV-C disinfection device, with capabilities to interconnect up to another SpeedyCare™ 220S or to its master device SpeedyCare™ 440M.

## LED Lights & Acoustics

All the lights and acoustic information is provided by its master control in the network.

## Interconnect up to 6 SpeedyCare™ 220S

SpeedyCare™ 440M, the Master of the disinfection network, can connect with up to 6 SpeedyCare™ 220 Satellite UV-C devices.

## 254 nm

A germicidal wavelength that inactivates pathogens in both air & surfaces. Disinfects 99.9% in minutes.

## Lightweight & Portable

With a total weight of 5 kg and a diameter of 20 cm, SpeedyCare™ 220S is easy to deploy in small spaces while connected to its master SpeedyCare™ 440M

## Hi-power UV-C lamps

A set of 4 hi-power lamps in cylindrical disposition emit UV-C light to ensure efficient and fast virus deactivation.

SEWERTRONICS, S.L. - Avenida Monteclaro s/n 28223 Pozuelo de Alarcón - Madrid - Spain | Phone +34 917 676 505 uvc-disinfection@sewertronics.com

# SpeedyCare™ 440

## TECHNICAL SPECIFICATIONS

| | | |
|---|---|---|
| UV-C Light Source | | |
| UV light source | 8 Hi-Power Mercury Lamps | |
| UV-C peak wavelength | 254 nm (nanometers) | |
| Lamps Life (60.000 cycles @ 15 min) | 9-10.000 h | |
| | | |
| Disinfection speeds* | @90% | @99% |
| 10 m2 | 1.25 min | 1.5 min |
| 20 m2 | 2.5 min | 5 min |
| | | |
| Physical | | |
| Dimensions (LxWxH) | 32 x 32 x 670 cm | |
| Total Weight | 8 kg | |
| Material | Chasis based on stainless steel & aluminum | |
| Support | Contact pads | |
| | | |
| Computer | | |
| Type | Industrial computer | |
| Memory | 4GB RAM | |
| CPU | Quad-core ARM-8 1,5 GHz | |
| | | |
| Connectivity | | |
| WI-FI connectivity | Dual band 2,4 GHz & 5 GHz | |
| Mode | AP & STA | |
| | | |
| Safety & Sensors | | |
| Auto-stop function | Yes, by motion sensors | |
| Visual alarms | Yes, RGB LEDs strip with blinking indicator | |
| Acoustic alarms | Yes, Beeper | |
| | | |
| Motion Sensors | | |
| Number of sensors | Yes, 2 @ 180º | |
| Type | PIR | |
| Eye Safe | Yes (infrared) | |
| Measurement range | 10 m | |
| | | |
| Power Requirements | | |
| Voltage | 230 V/50 Hz – 110 V/60 Hz | |
| Mains requirement | E-type or Std. Schuko wall socket | |
| Connection | 5 m power cord with V-lock system | |
| | | |
| Power Supply | | |
| Voltage | 220 V | |
| Power | 1000 W | |
| Mains requirement | Std. Schuko wall socket | |

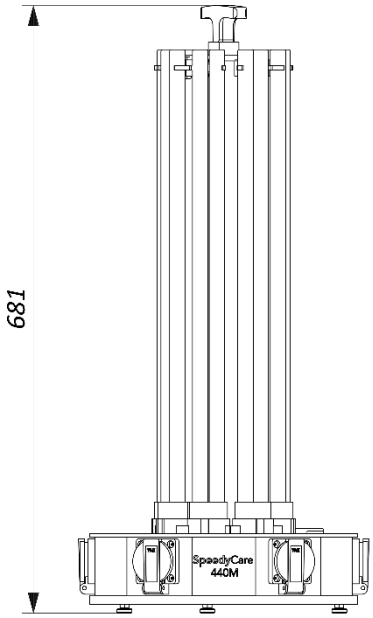


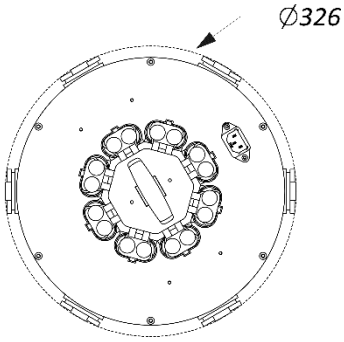

# SpeedyCare™ 220S

## TECHNICAL SPECIFICATIONS

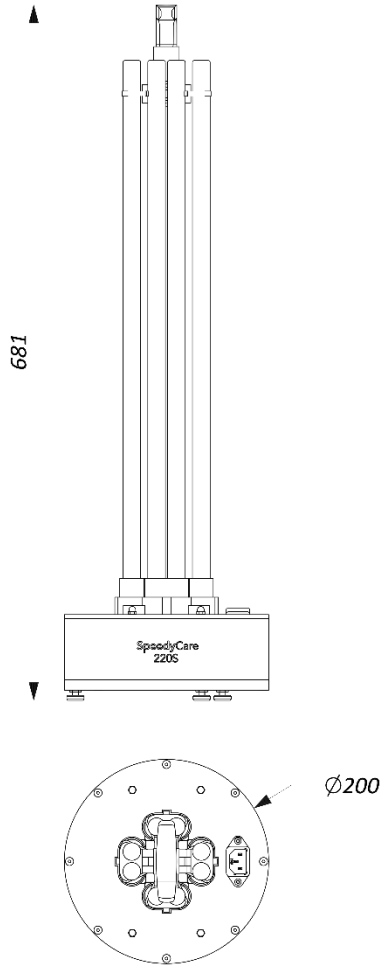


| | | |
|---|---|---|
| UV-C Light Source | | |
| UV light source | 4 Hi-Power Mercury Lamps | |
| UV-C peak wavelength | 254 nm (nanometers) | |
| Lamps Life (60.000 cycles @ 15 min) | 9-10.000 h | |
| | | |
| Disinfection speeds* | @90% | @99% |
| 10 m2 | 2.5 min | 5 min |
| | | |
| Physical | | |
| Dimensions (LxWxH) | 20 x 20 x 670 cm | |
| Total Weight | 5 kg | |
| Material | Chasis based on stainless steel & aluminum | |
| Support | Contact pads | |
| | | |
| Computer | | |
| Type | - | |
| Memory | - | |
| CPU | - | |
| | | |
| Connectivity | | |
| WI-FI connectivity | - | |
| Mode | - | |
| | | |
| Safety & Sensors | | |
| Auto-stop function | - | |
| Visual alarms | - | |
| Acoustic alarms | Yes, Beeper | |
| | | |
| Motion Sensors | | |
| Number of sensors | - | |
| Type | - | |
| Eye Safe | - | |
| Measurement range | - | |
| | | |
| Power Requirements | | |
| Voltage | 230 V/50 Hz – 110 V/60 Hz | |
| Mains requirement | E-type or Std. Schuko wall socket | |
| Connection | 5 m power cord with V-lock system | |
| | | |
| Power Supply | | |
| Voltage | 220 V | |
| Power | 500 W | |
| Mains requirement | Std. Schuko wall socket | |

UV LIGHT IS AN ELECTROMAGNETIC RADIATION

# What is UV-C?

Ultraviolet (UV) light is an electromagnetic radiation. Its wavelength spectrum falls in the region between visible light and X-Rays. It is invisible and ranges from 100 nm to 400 nm has been traditionally subdivided in 3 categories or regions.

Natural UV radiation is of course coming from the Sun. Around 10% of all that energy falls within the UV range, and only 4% is capable of crossing our atmosphere and reaching the Earth's surface where we live. The rest is absorbed by the oxygen (O2) and ozone (O3) in stratosphere, blocking most of the UV-B and all the UV-C component of the UV light.

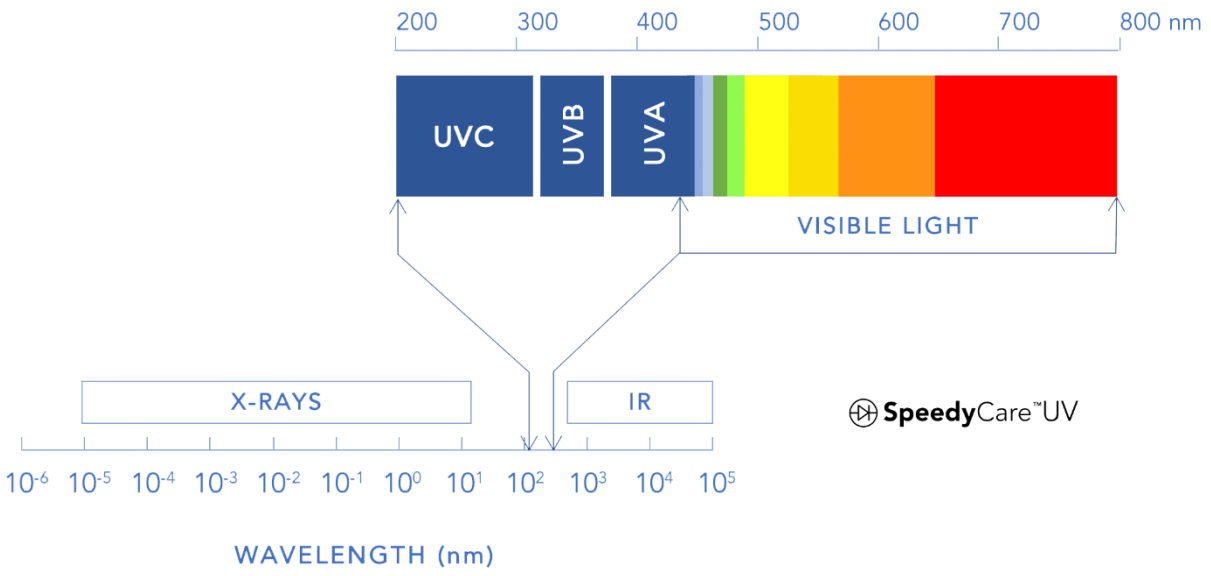


| | | |
|---|---|---|
| **UV-C** | 100 nm to 280 nm | Germicidal radiation - inactivates pathogens |
| **UV-B** | 280 nm to 315 nm | Actinic radiation - causes photochemical reactions |
| **UV-A** | 315 nm to 400 nm | Considered non-germicidal |

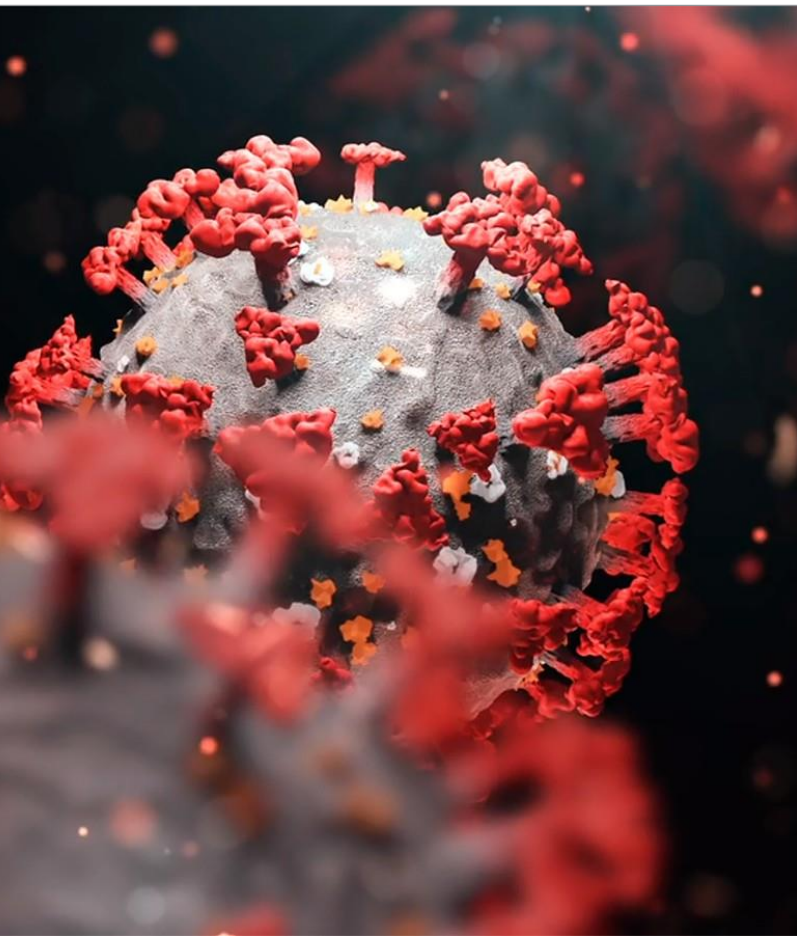

UV-C DISINFECTING ROBOT

## Why UV-C Deactivates Viruses?

UV-C is an electromagnetic radiation that destroys the ability of microorganisms to reproduce by causing photochemical changes in nucleic acids. Wavelengths in the UV-C range are especially damaging to cells because they are absorbed by nucleic acids, disabling their ability to perform vital cellular functions. The germicidal effectiveness of UV-C peaks at about 250–265 nm, this corresponds to the UV absorption by bacterial DNA. The germicidal effectiveness of UV-C radiation can vary between pathogens, and the broader range wavelengths that include UV-B also make a small contribution to inactivation (Webb and Tuveson 1982).
UV-C radiation has been proven as an effective disinfection method for 80 years now.

UV IS A WELL-KNOWN TECHNOLOGY IN THIS FIELD

## Has UV been used before for Inactivation of Viruses?

Yes, in fact UV is a well-known technology in this field. It is reported that Hart in 1937 used an array of UV lamps to sterilize supply air in a surgical operating room. Hart employed direct, high-intensity UV for the disinfection of hospital operating room air at the Duke University Hospital, after traditional methods had failed. Riley, in 1972, installed UV lamps in a school ventilation system dramatically reducing the incidence of measles, and subsequent applications enjoyed similar successes. Since then, UV-C has been successfully implemented in a number of appliances and devices to support inactivating microorganisms, such as bacteria, viruses and fungi.

The first UVC continuous disinfection robots were built ca. 15 years ago, mainly to decrease the number of HealthCare-Associated Infections (HAIs).

# Disinfecting Speeds for SpeedyCare UV Robot

SpeedyCare™ UV robot disinfection capabilities are proportional to the exposure time. The UV-C lamps work at maximum output and is lighting time what defines the degree of pathogens deactivation.

But disinfection rate is not an absolute variable. Microbiologists use the log reduction factor to express the level of microorganisms' disinfection, and this reduction factor conditions the exposure time of a given disinfecting UV-C device.

SPEEDYCARE™ UV DISINFECTING PERFORMANCE

## The Log Reduction Concept explained

Log Reduction is a mathematical term that is used to express the percentage or proportion of microorganisms deactivated in a disinfection process. It is calculated by the 10-base logarithm of the relation between the pathogen's units before and after the UV light exposure.

This table shows the reduction after disinfection for every given Log Reduction factor.

| Log Reduction | Reduction Factor | Percent Reduced |
|---|---|---|
| 1 | 10 | 90% |
| 2 | 100 | 99% |
| 3 | 1,000 | 99.9% |
| 4 | 10,000 | 99.99% |

A FUNCTION OF MAINLY 4 VARIABLES

## How light exposure time is calculated

Exposure time to disinfect a room is a function of mainly 4 variables, these are:

1. Pathogen UV-C susceptibility (microbe-fluence)
2. Log Reduction Factor (LRF)
3. UV-C device radiation power (DRP)
4. Distance from UV-C device to the exposed microbial Exposure

Time = Φ (microbe-fluence, LRF, DPR, Distance)

## Disinfection times for SARS-CoV-2

It is expected that fluence for the SARS-CoV-2 virus to be similar to any other enveloped coronavirus.

According several susceptibility studies, it is proven the right dose to disinfect 90% of coronaviruses ranges from 6 mJ/cm2 (mili-Joule per square cm) to 24 mJ/cm2 . To be on the safe side, we assume 25 mJ/cm2 as expected fluence to kill 90% (Log Factor 1) of SARS- CoV-2 in surfaces.

To achieve 99% (Log Factor 2) average increase of fluence for most of the known coronaviruses is 100%, so it is considered 50 mJ/cm2 as the minimum dosage to deactivate 99% of SARS-CoV-2.

Log Factor 3, this is, 99,9% reduction would recommend exposing the virus to 75 mJ/cm2.

**SpeedyCare™ 440**

| Room Dimensions | 90% Disinfection | 99% Disinfection |
|---|---|---|
| 10 $m^2$ | 1.25 min | 2.5 min |
| 20 $m^2$ | 2.5 min | 5 min |

**SpeedyCare™ 220**

| Room Dimensions | 90% Disinfection | 99% Disinfection |
|---|---|---|
| 10 $m^2$ | 2.5 min | 5 min |

# About COVID19 & SARS-CoV-2

COVID-19 is the respiratory disease caused by the SARS-CoV-2 virus that has generated outbreaks worldwide. Structurally, this virus is not unique and is similar to other coronaviruses such as Severe Acute Respiratory Syndrome (SARS) and Middle East Respiratory Syndrome (MERS). The SARS-CoV-2 has been identified as a new variant in the betacoronavirus family (Fisher 2020).

Every virus requires a certain dose of UV-C energy to disable their ability to perform vital cellular functions. The SARS-CoV-2 virus is now under ongoing ultraviolet susceptibility studies, but there is a common understanding that due to the fact that is a typical enveloped RNA virus, the dosage is expected to be similar to SARS-CoV-2 , but many other tests on related coronaviruses have been conducted over the years. Many tests on related virus have concluded that coronaviruses are highly susceptible to ultraviolet inactivation. This report reviews these studies and provides an estimate of the ultraviolet susceptibility.

| Virus type | Deactivation Dose (90%) | Source |
|---|---|---|
| Coronavirus | 0,70 (mJ/cm2) | Walker 2007 |
| Berne virus (coronaviridae) | 0,70 (mJ/cm2) | Weiss 1986 |
| Murine coronavirus (MHV) | 1,50 (mJ/cm2) | Hirano 1978 |
| Canine Coronavirus (CCV) | 2,90 (mJ/cm2) | Saknimit 1988 |
| Murine coronavirus (MHV) | 2,90 (mJ/cm2) | Saknimit 1988 |
| SARS Coronavirus CoV-P9 | 4,00 (mJ/cm2) | Duan 2003 |
| Murine coronavirus (MHV) | 10,30 (mJ/cm2) | Liu 2003 |
| SARS Coronavirus (Hanoi) | 13,40 (mJ/cm2) | Kariwa 2004 |
| SARS Coronavirus (Urbani) | 24,10 (mJ/cm2) | Darnell 2004 |

As soon as SARS-CoV-2 virus deactivation dose is measured, SpeedyCare™ UV robot would incorporate that value into its database to recalculate the right timing. In the meantime, SpeedyCare™ UV robot would consider a dose of 50 mJ/cm2 for a deactivation rate of 99%.

INTERNATIONAL STANDARD SPECIFIES

# Safety Standards: ISO 15858:2016

This International Standard specifies minimum human safety requirements for the use of UVC lamp devices. It is applicable to in-duct UVC systems, upper-air in room UVC systems, portable in-room disinfection UVC devices, and any other UVC devices which may cause UVC exposure to humans. It is not applicable to UVC products used for water disinfection.

Maximum daily dose per person is set in 6 mJ/cm2. SpeedyCare UV robot includes a set of safety features, including motion sensors which ensure an immediate switch-off to prevent the operator from UV-C exposure. However, in case of direct exposure to UV-C and according this standard, any operator could be safely exposed every day to 1 min at a distance of 4 m from the device.

Despite of the evident low risk of exposure, we recommend the use protective clothing and goggles, typically used for occupational safety and health purposes.