SpeedyCare™ UV
The SEWERTRONICS brand for disinfection

SpeedyCare™ 750

SARS-COV DISINFECTING ROBOT

Single Placement Disinfection

SpeedyCare™ 750 is an innovative robot emitting UV-C light in the germicidal range of 254 nm, overcoming the rising threat of pathogens like viruses, bacteria & fungi. This technology ensures proper surface and airborne disinfection, destroying the ability of microorganisms to reproduce by causing photochemical changes in nucleic acids. Designed in 2020, SpeedyCare™ 750 robot has been engineered to be easy and safe to operate in hospitals, hotels, shops, gyms, care homes

AIR & SURFACE
UV-C DISINFECTION

UV-C light is a non-invasive disinfection method, delivering instantly a lethal dose of radiation to pathogens both in surface and air, deactivating their capabilities to reproduce.

30 M2 IN 5 MIN
99% DISINFECTION

SpeedyCare™ 750 robot is a disinfection device which delivers UV-C light omnidirectionally to all the objects in the room. 99% of pathogens are eliminated from surface and air within minutes.

CERTIFICATION
SAFETY ACCORDING ISO15858:2016

SpeedyCare™ 750 lighting properties have been certified by an accredited laboratory that guarantees its UV-C radiation performance and hence the disinfection capabilities. The device is also designed following the standards according ISO 15858:2016.

DISINFECT IN MINUTES
FROM A SINGLE PLACEMENT

SpeedyCare™ 750's robot hi-output UV lamps allows a single placement operation for a complete room disinfection. Large areas to be disinfected in several cleaning cycles.

LED LIGHTS & ACOUSTICS
FOR OPERATION AND SAFETY

A multicolor LED omnidirectional light provides color-codes for extra safety and information about the operation of the SpeedyCare™ 750 robot. Acoustic signal brings extra information to the robot user.

MOTION SENSORS
AUTO-STOP FUNCTION

Four built in motion sensors are located at the top of the robot, for a 360º auto-stop safety function, avoiding unprogrammed light exposures.

SpeedyCare™ 750
PROFESSIONAL UV-C DISINFECTING ROBOT

SpeedyCare™ 750 is single placement disinfection robot, delivering 750 of UV-C power and fitting perfectly the disinfection needs of hotels, restaurants, gyms and medium size offices.

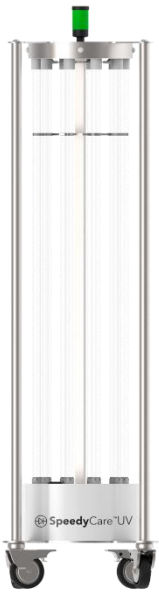

SEWERTRONICS, S.L. - Avenida Monteclaro s/n 28223 Pozuelo de Alarcón - Madrid - Spain | Phone +34 917 676 505 uvc-disinfection@sewertronics.com

SpeedyCare™ UV
The SEWERTRONICS brand for disinfection

UV-C DISINFECTING ROBOT

SpeedyCare™ 750

Disinfection Cycle

SpeedyCare™ UV robot disinfects rooms within minutes. Place the robot in the middle of the room and let it do the work, deactivating the pathogens in both air and surfaces. UV-C light disinfection performance is scientifically proven and ensures proper surface and airborne disinfection, destroying the ability of microorganisms to reproduce by causing photochemical changes in nucleic acids

SEWERTRONICS, S.L. - Avenida Monteclaro s/n 28223 Pozuelo de Alarcón - Madrid - Spain | Phone +34 917 676 505 uvc-disinfection@sewertronics.com

UV IS A SCIENTIFICALLY PROVEN TECHNOLOGY FOR DISINFECTION

Features & Characteristics

SpeedyCare™ 750 is an innovative robot emitting UV-C light in the germicidal range of 254 nm, overcoming the rising threat of pathogens like viruses, bacteria & fungi. This technology ensures proper surface and airborne disinfection, destroying the ability of microorganisms to reproduce by causing photochemical changes in nucleic acids.

SpeedyCare™ 750 is an advanced robot designed in 2020, engineered to be easy and safe to operate several applications as hospitals, hotels, shops, gyms, care homes and any habitable space.

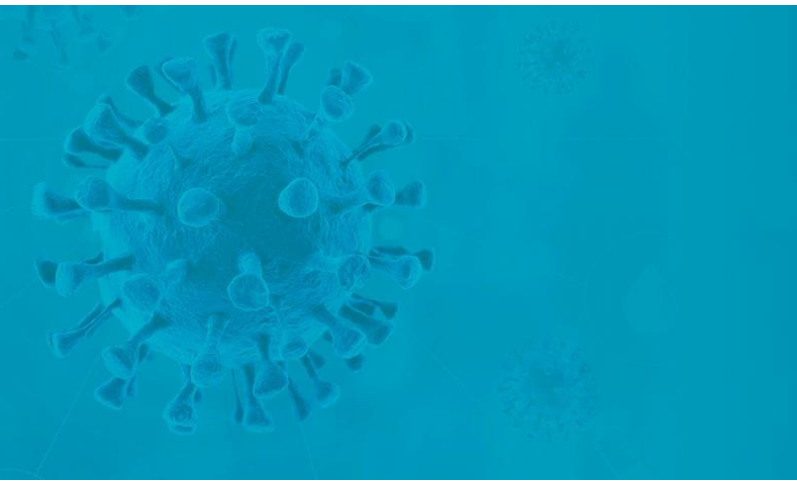

EFFICIENT UV-C DISINFECTING ROBOT

Airborne Disinfection

The sensitivity to UV-C of microbes suspended in the air is much greater than in surfaces. (Webb 1965). As several studies confirm, pathogens are more vulnerable to UV inactivation in air, it is therefore conservative to assume surface rate constants as sufficient to deactivate virus, bacteria and fungi suspended in air.

A 99% PATHOGENS INACTIVATION

Fast Disinfection

SpeedyCare™ 750 robot features a set of UV-C lamps delivering the right dose of radiation to effectively deactivate pathogens in both air and surface. User selects the LOG factor, meaning the % percentage of disinfection. Typical used values are 90%, 99% and 99.9%.

The larger is the room and the higher is the LOG factor, the longer will be the disinfection time.

Room Dimensions	90% Disinfection	99% Disinfection
10 m^2	1 min	2 min
20 m^2	1.5 min	3 min
30 m^2	2.5 min	5 min

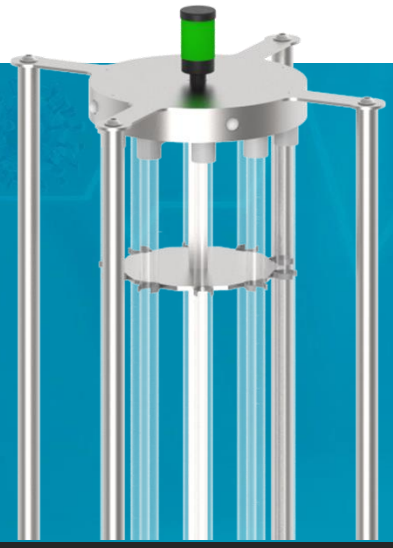

EFFICIENT UV-C DISINFECTING ROBOT

Hi-Output UV-C lamps

A set of 10 hi-power lamps in cylindrical disposition emit UV-C light to ensure efficient and fast virus deactivation. More powerful UV-C devices improve and reduce the exposure times to disinfect, representing a more efficient and cost-effective equipment.

PHILIPS

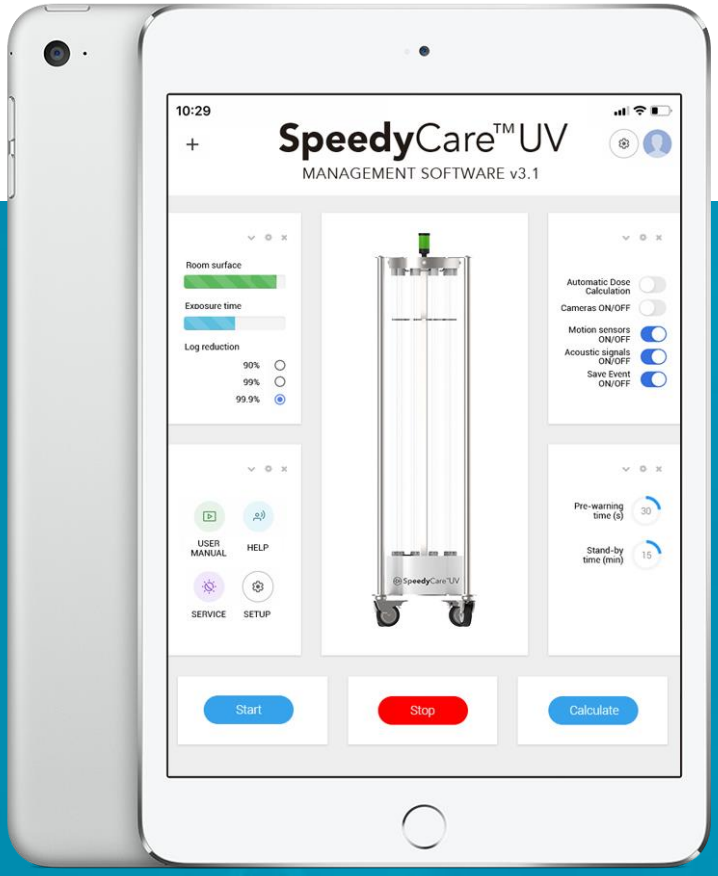

EFFICIENT UV-C DISINFECTING ROBOT

Controlled by phone or tablet

SpeedyCare™ 750 generates it's own WiFi network so can wirelessly be controlled by a conventional tablet or smartphone. Our own app - SpeedyCare™ UV Management Software provides access to all the necessary functions such as - delay time definition in accordance to user's preferences, user manual and more.

The SpeedyCare™ 750 disinfection robot, after connecting to any WAN, offers an integrated maintenance and remote diagnostic capability.

A NON-TOXIC ANTIMICROBIAL AGENT

UV-C is a non-toxic light

UVUV-C Light is a non-toxic antimicrobial agent that inactivates pathogens both in air and surfaces. UV-C Light produces photochemical reactions that kills viruses, bacteria and fungi, avoiding the need of using aerosols or harsh chemicals. This makes SpeedyCare UV a safe disinfection device for the operating staff, without the need of ventilating or waiting before bringing

SpeedyCare™ UV
The SEWERTRONICS brand for disinfection

SpeedyCare™ 750

PROFESSIONAL UV-C DISINFECTING ROBOT

SpeedyCare™ 750 is an innovative robot emitting UV-C light in the germicidal range of 254 nm, overcoming the rising threat of pathogens like viruses

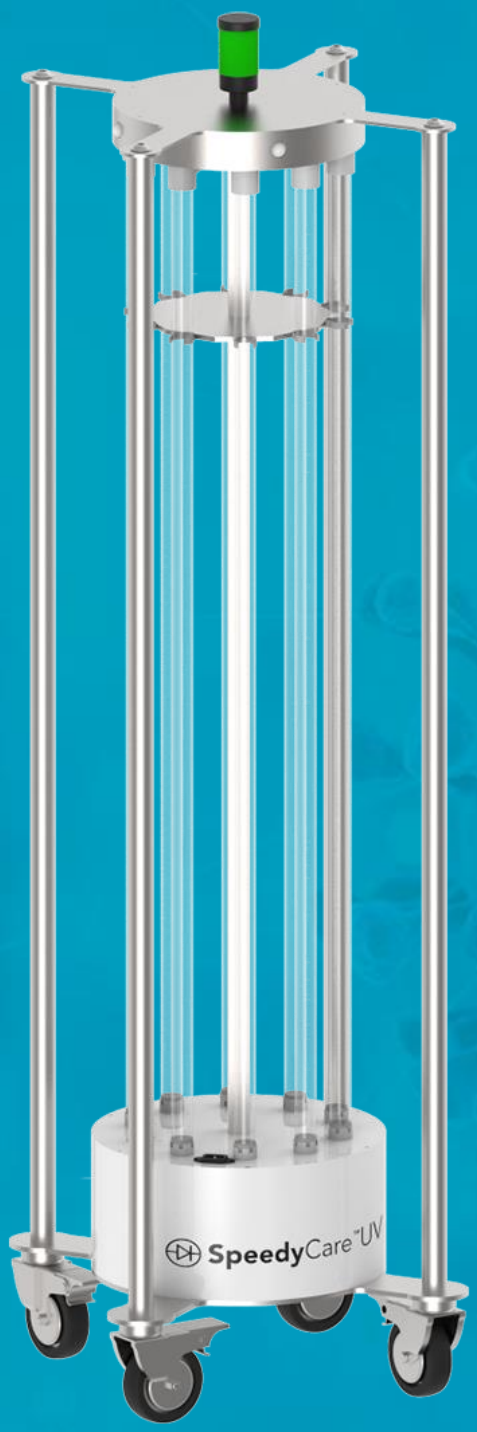

1.67 M

SpeedyCare™ 750 features a total height of 1.67 m, allowing homogeneous light exposure along the room surfaces

LED Lights & Acoustics

A multicolor LED omnidirectional light provides color-codes for extra safety and information about the operation of the SpeedyCare™ 750 robot. Acoustic signal brings extra information to the robot user.

Cylindrical Base

A cylindrical base with 4 wheels ensures robot stability and easy access to rooms through standard doorways

254 nm

A germicidal wavelength that inactivates pathogens in both air & surfaces. Disinfects 99.9% in minutes.

Motion sensors. Auto-Stop

Four embedded motion sensors for a 360º auto-stop safety function, avoiding unprogrammed light exposures to operators.

Hi-power UV-C lamps

A set of 10 hi-power lamps in cylindrical disposition emit UV-C light to ensure efficient and fast virus deactivation.

SEWERTRONICS, S.L. - Avenida Monteclaro s/n 28223 Pozuelo de Alarcón - Madrid - Spain | Phone +34 917 676 505 uvc-disinfection@sewertronics.com

Applications

Where can SpeedyCare™ UV operate?

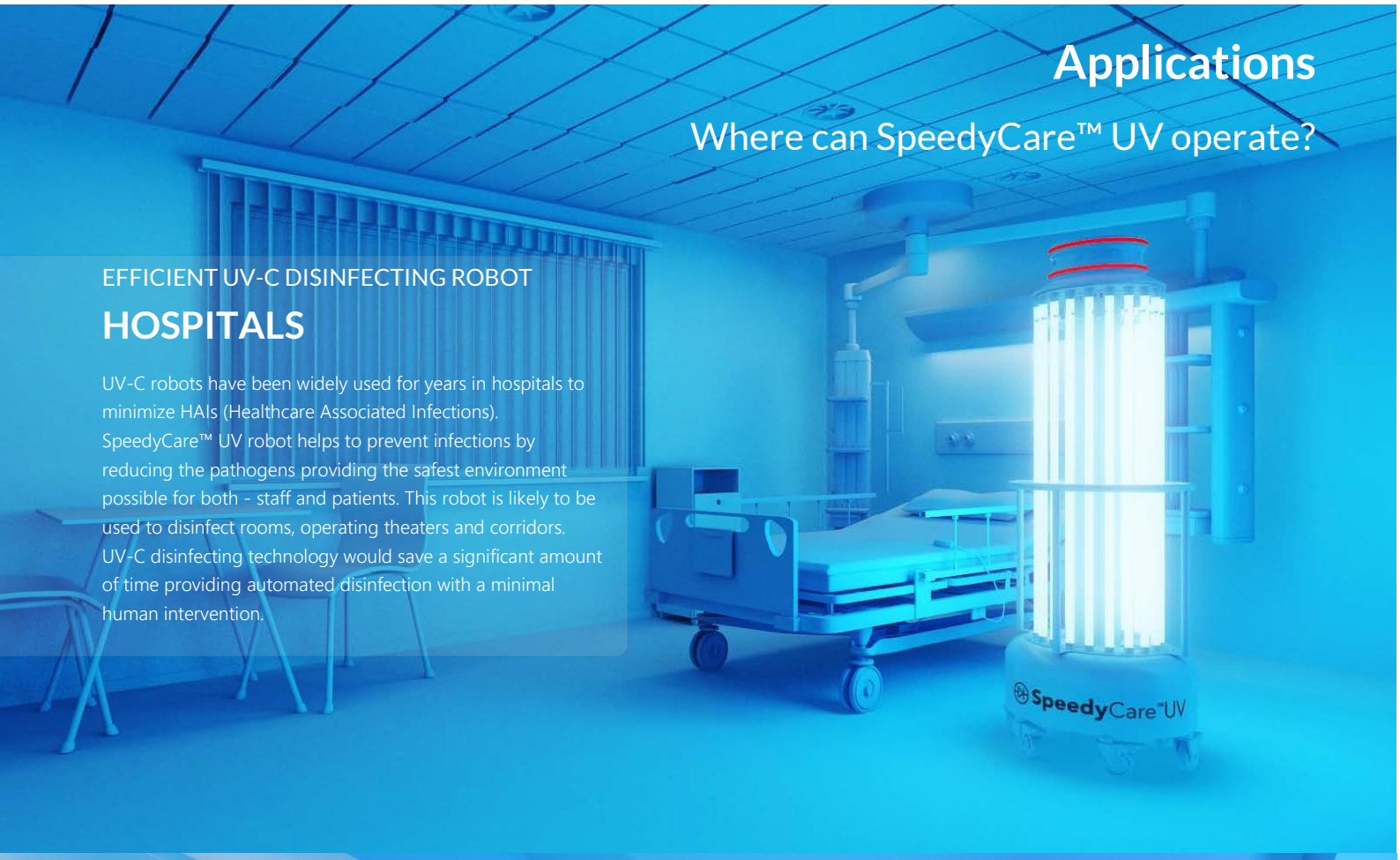

EFFICIENT UV-C DISINFECTING ROBOT

HOSPITALS

UV-C robots have been widely used for years in hospitals to minimize HAIs (Healthcare Associated Infections). SpeedyCare™ UV robot helps to prevent infections by reducing the pathogens providing the safest environment possible for both - staff and patients. This robot is likely to be used to disinfect rooms, operating theaters and corridors. UV-C disinfecting technology would save a significant amount of time providing automated disinfection with a minimal human intervention.

EFFICIENT UV-C DISINFECTING ROBOT

HOTEL & RESTAURANTS

SpeedyCare™ UV robot supports hotel industry providing an effective and rapid method of disinfecting guest rooms. The robot versatility, portability and cleaning speed perfectly integrates with hotel housekeeping cleaning procedures. Every room can be disinfected within minutes by the cleaning staff, without the need of intervention by specialist service operators or external third parties. We provide customs solutions adapting to every project

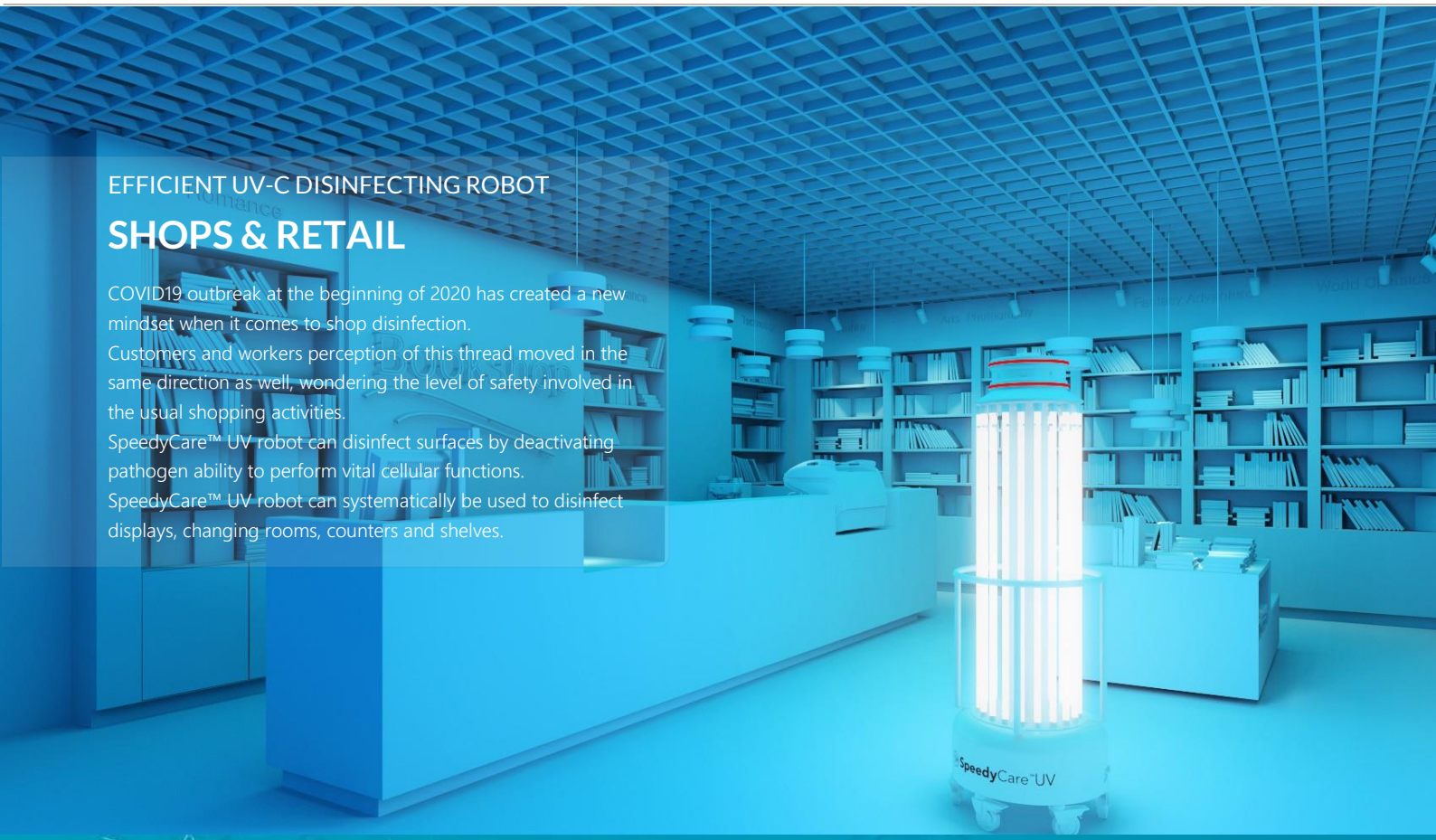

EFFICIENT UV-C DISINFECTING ROBOT

SHOPS & RETAIL

COVID19 outbreak at the beginning of 2020 has created a new mindset when it comes to shop disinfection.
Customers and workers perception of this thread moved in the same direction as well, wondering the level of safety involved in the usual shopping activities.
SpeedyCare™ UV robot can disinfect surfaces by deactivating pathogen ability to perform vital cellular functions.
SpeedyCare™ UV robot can systematically be used to disinfect displays, changing rooms, counters and shelves.

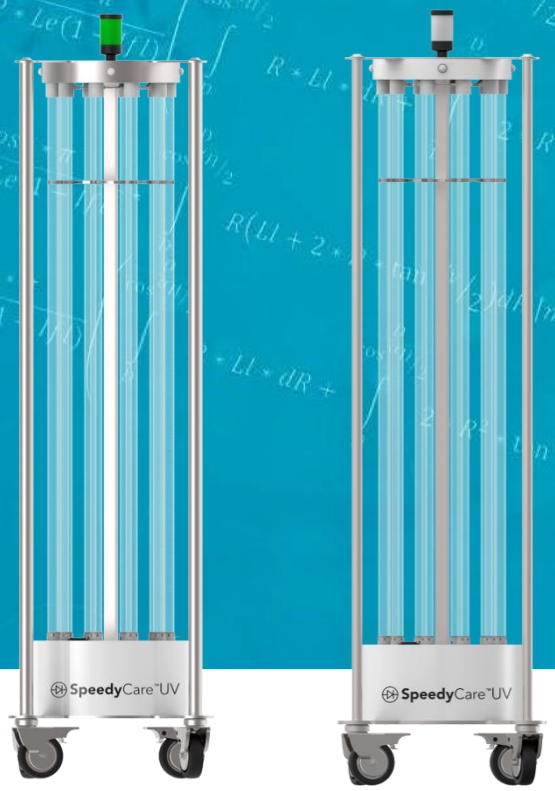

SPEEDYCARE™ 750 DISINFECTING PERFORMANCE

Disinfecting Speeds

SpeedyCare™ 750 robot disinfection capabilities are proportional to the exposure time. The UV-C lamps work at maximum output; it is lighting time what defines the degree of pathogens deactivation. But disinfection rate is not an absolute variable. Microbiologists use the log reduction factor to express the level of microorganisms' disinfection, and this reduction factor conditions the exposure time for a given disinfecting UV-C device.

Room Dimensions	90% Disinfection	99% Disinfection
10 m^2	1 min	2 min
20 m^2	1.5 min	3 min
30 m^2	2.5 min	5 min

SpeedyCare™ 750

TECHNICAL SPECIFICATIONS

UV-C Light Source		
UV light source	Hi-Power Mercury Lamps	
UV-C peak wavelength	254 nm (nanometers)	
Lamps Life (60.000 cycles @ 15 min)	9-10.000 h	
Disinfection speeds*	@90%	@99%
10 m2	1 min	2 min
20 m2	1.5 min	3 min
30 m2	2.5 min	5 min
Physical		
Dimensions (LxWxH)	167 x 60 x 60 cm	
Total Weight	39 kg	
Material	Chasis based on stainless steel & aluminum	
Support	Structure with 4 wheels	
Transport flight & protection case	70x70x170 mm	
Computer		
Type	Industrial computer	
Memory	4GB RAM	
CPU	Quad-core ARM-8 1,5 GHz	
Connectivity		
WI-FI connectivity	Dual band 2,4 GHz & 5 GHz	
Mode	AP & STA	
Safety & Sensors		
Auto-stop function	Yes, by motion sensors & cameras	
Visual alarms	Yes, RGB LEDs strip with blinking indicator	
Acoustic alarms	Yes, Beeper/ Voice synthesizer in option	
Motion Sensors		
Number of sensors	Yes, 4 @ 90º	
Type	PIR	
Eye Safe	Yes (infrared)	
Measurement range	10 m	
Power Requirements		
Voltage	230 V/50 Hz – 110 V/60 Hz	
Mains requirement	E-type or Std. Schuko wall socket	
Connection	5 m power cord with V-lock system	
Power Supply		
Voltage	220 V	
Power	1000 W	
Mains requirement	Std. Schuko wall socket	

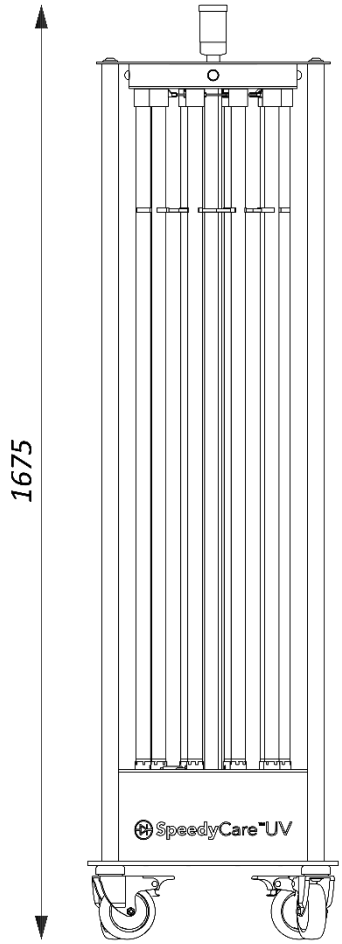

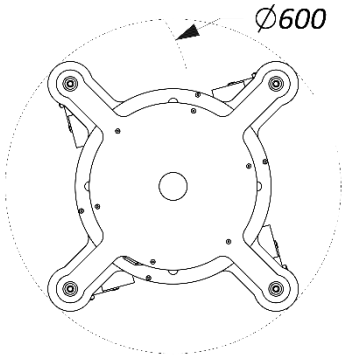

UV LIGHT IS AN ELECTROMAGNETIC RADIATION

What is UV-C?

Ultraviolet (UV) light is an electromagnetic radiation. Its wavelength spectrum falls in the region between visible light and X-Rays. It is invisible and ranges from 100 nm to 400 nm has been traditionally subdivided in 3 categories or regions.

Natural UV radiation is of course coming from the Sun. Around 10% of all that energy falls within the UV range, and only 4% is capable of crossing our atmosphere and reaching the Earth's surface where we live. The rest is absorbed by the oxygen (O2) and ozone (O3) in stratosphere, blocking most of the UV-B and all the UV-C component of the UV light.

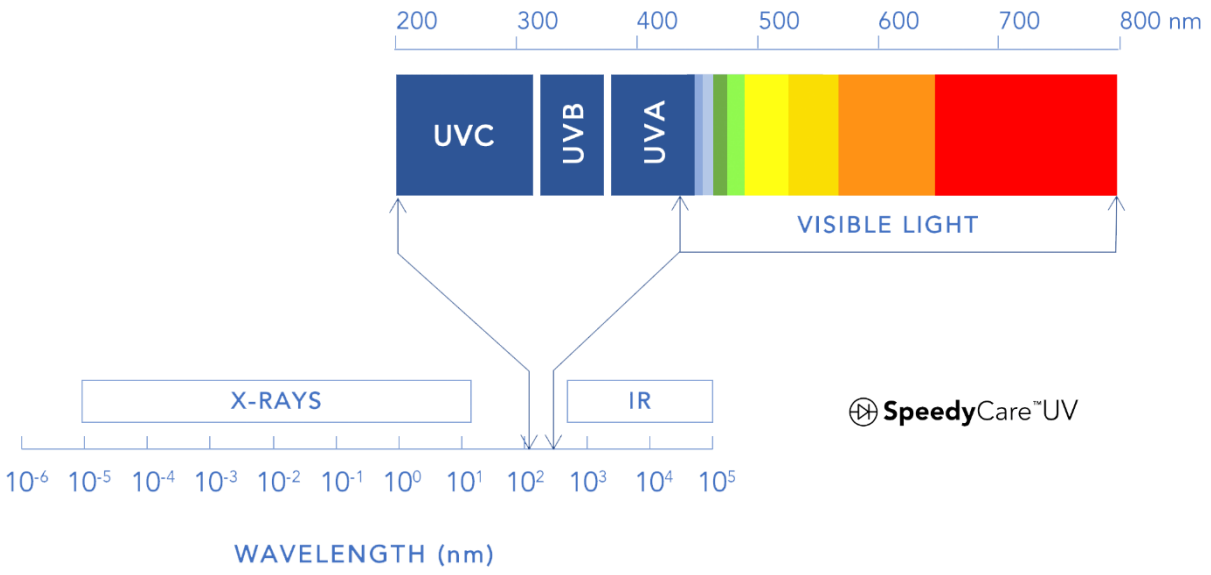

UV-C	100 nm to 280 nm	Germicidal radiation - inactivates pathogens
UV-B	280 nm to 315 nm	Actinic radiation - causes photochemical reactions
UV-A	315 nm to 400 nm	Considered non-germicidal

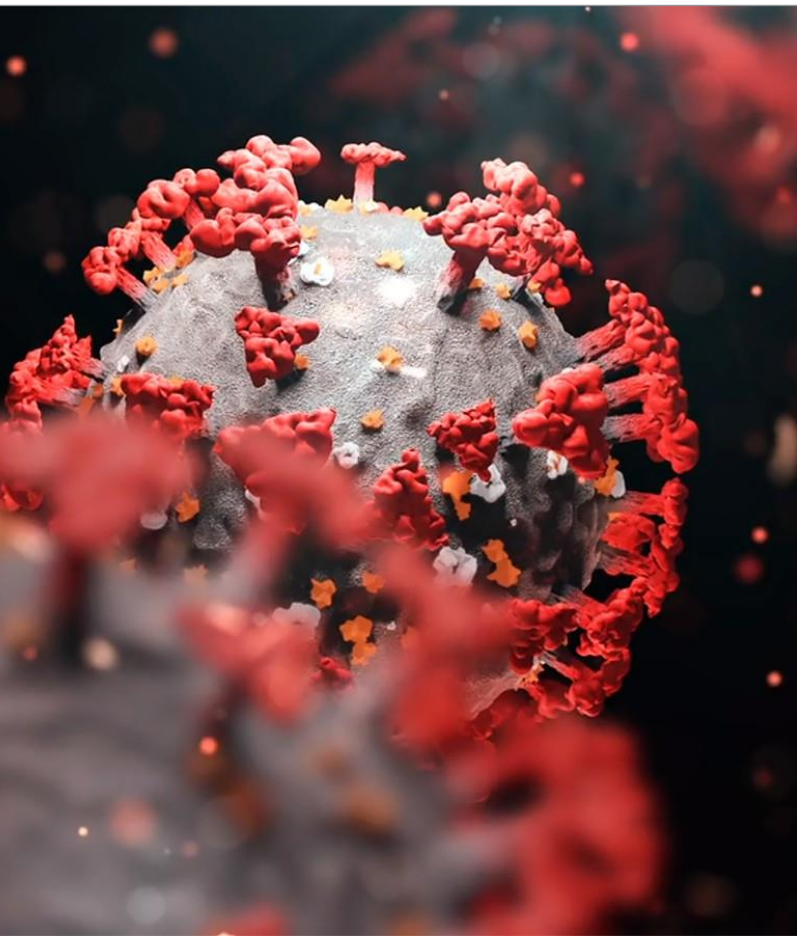

UV-C DISINFECTING ROBOT

Why UV-C Deactivates Viruses?

UV-C is an electromagnetic radiation that destroys the ability of microorganisms to reproduce by causing photochemical changes in nucleic acids. Wavelengths in the UV-C range are especially damaging to cells because they are absorbed by nucleic acids, disabling their ability to perform vital cellular functions. The germicidal effectiveness of UV-C peaks at about 250–265 nm, this corresponds to the UV absorption by bacterial DNA. The germicidal effectiveness of UV-C radiation can vary between pathogens, and the broader range wavelengths that include UV-B also make a small contribution to inactivation (Webb and Tuveson 1982).
UV-C radiation has been proven as an effective disinfection method for 80 years now.

UV IS A WELL-KNOWN TECHNOLOGY IN THIS FIELD

Has UV been used before for Inactivation of Viruses?

Yes, in fact UV is a well-known technology in this field. It is reported that Hart in 1937 used an array of UV lamps to sterilize supply air in a surgical operating room. Hart employed direct, high-intensity UV for the disinfection of hospital operating room air at the Duke University Hospital, after traditional methods had failed. Riley, in 1972, installed UV lamps in a school ventilation system dramatically reducing the incidence of measles, and subsequent applications enjoyed similar successes. Since then, UV-C has been successfully implemented in a number of appliances and devices to support inactivating microorganisms, such as bacteria, viruses and fungi.

The first UVC continuous disinfection robots were built ca. 15 years ago, mainly to decrease the number of HealthCare-Associated Infections (HAIs).

Disinfecting Speeds for SpeedyCare UV Robot

SpeedyCare™ UV robot disinfection capabilities are proportional to the exposure time. The UV-C lamps work at maximum output and is lighting time what defines the degree of pathogens deactivation.

But disinfection rate is not an absolute variable. Microbiologists use the log reduction factor to express the level of microorganisms' disinfection, and this reduction factor conditions the exposure time of a given disinfecting UV-C device.

SPEEDYCARE™ UV DISINFECTING PERFORMANCE

The Log Reduction Concept explained

Log Reduction is a mathematical term that is used to express the percentage or proportion of microorganisms deactivated in a disinfection process. It is calculated by the 10-base logarithm of the relation between the pathogen's units before and after the UV light exposure.

This table shows the reduction after disinfection for every given Log Reduction factor.

Log Reduction	Reduction Factor	Percent Reduced
1	10	90%
2	100	99%
3	1,000	99.9%
4	10,000	99.99%

A FUNCTION OF MAINLY 4 VARIABLES

How light exposure time is calculated

Exposure time to disinfect a room is a function of mainly 4 variables, these are:

1. Pathogen UV-C susceptibility (microbe-fluence)
2. Log Reduction Factor (LRF)
3. UV-C device radiation power (DRP)
4. Distance from UV-C device to the exposed microbial Exposure

Time = Φ (microbe-fluence, LRF, DPR, Distance)

Disinfection times for SARS-CoV-2

It is expected that fluence for the SARS-CoV-2 virus to be similar to any other enveloped coronavirus.

According several susceptibility studies, it is proven the right dose to disinfect 90% of coronaviruses ranges from 6 mJ/cm2 (mili-Joule per square cm) to 24 mJ/cm2 . To be on the safe side, we assume 25 mJ/cm2 as expected fluence to kill 90% (Log Factor 1) of SARS- CoV-2 in surfaces.

To achieve 99% (Log Factor 2) average increase of fluence for most of the known coronaviruses is 100%, so it is considered 50 mJ/cm2 as the minimum dosage to deactivate 99% of SARS-CoV-2.

Log Factor 3, this is, 99,9% reduction would recommend exposing the virus to 75 mJ/cm2.

Room Dimensions	90% Disinfection	99% Disinfection
10 m^2	1 min	2 min
20 m^2	1.5 min	3 min
30 m^2	2.5 min	5 min

About COVID19 & SARS-CoV-2

COVID-19 is the respiratory disease caused by the SARS-CoV-2 virus that has generated outbreaks worldwide. Structurally, this virus is not unique and is similar to other coronaviruses such as Severe Acute Respiratory Syndrome (SARS) and Middle East Respiratory Syndrome (MERS). The SARS-CoV-2 has been identified as a new variant in the betacoronavirus family (Fisher 2020).

Every virus requires a certain dose of UV-C energy to disable their ability to perform vital cellular functions. The SARS-CoV-2 virus is now under ongoing ultraviolet susceptibility studies, but there is a common understanding that due to the fact that is a typical enveloped RNA virus, the dosage is expected to be similar to SARS-CoV-2 , but many other tests on related coronaviruses have been conducted over the years. Many tests on related virus have concluded that coronaviruses are highly susceptible to ultraviolet inactivation. This report reviews these studies and provides an estimate of the ultraviolet susceptibility.

Virus type	Deactivation Dose (90%)	Source
Coronavirus	0,70 (mJ/cm2)	Walker 2007
Berne virus (coronaviridae)	0,70 (mJ/cm2)	Weiss 1986
Murine coronavirus (MHV)	1,50 (mJ/cm2)	Hirano 1978
Canine Coronavirus (CCV)	2,90 (mJ/cm2)	Saknimit 1988
Murine coronavirus (MHV)	2,90 (mJ/cm2)	Saknimit 1988
SARS Coronavirus CoV-P9	4,00 (mJ/cm2)	Duan 2003
Murine coronavirus (MHV)	10,30 (mJ/cm2)	Liu 2003
SARS Coronavirus (Hanoi)	13,40 (mJ/cm2)	Kariwa 2004
SARS Coronavirus (Urbani)	24,10 (mJ/cm2)	Darnell 2004

As soon as SARS-CoV-2 virus deactivation dose is measured, SpeedyCare™ UV robot would incorporate that value into its database to recalculate the right timing. In the meantime, SpeedyCare™ UV robot would consider a dose of 50 mJ/cm2 for a deactivation rate of 99%.

INTERNATIONAL STANDARD SPECIFIES

Safety Standards: ISO 15858:2016

This International Standard specifies minimum human safety requirements for the use of UVC lamp devices. It is applicable to in-duct UVC systems, upper-air in room UVC systems, portable in-room disinfection UVC devices, and any other UVC devices which may cause UVC exposure to humans. It is not applicable to UVC products used for water disinfection.

Maximum daily dose per person is set in 6 mJ/cm2. SpeedyCare UV robot includes a set of safety features, including motion sensors which ensure an immediate switch-off to prevent the operator from UV-C exposure. However, in case of direct exposure to UV-C and according this standard, any operator could be safely exposed every day to 1 min at a distance of 4 m from the device.

Despite of the evident low risk of exposure, we recommend the use protective clothing and goggles, typically used for occupational safety and health purposes.